

AQUAFY

Kitchen mixer with two outlets for filtered water and tap water and retractable swivel C-Spout. Cold Start. 5-stage filter included.

DIMENSIONS

Length	8.66 inch
Height	17.24 inch

COLOURS AND FINISHES

SM Stainless Steel Finish

TECHNICAL DRAWINGS

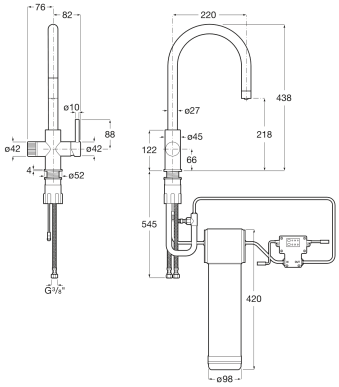

FEATURES

Kitchen mixer with two outlets for filtered water and tap water, retractable swivel C-Spout, rinse spray function, and flexible supply hoses. Cold Start. 5-stage filter included.

Application place: Kitchen sink

Cold water position in the center

Energy Consumption kWh: 698.47

Faucet type: Twin-lever

Filtration capacity (l): 1200

Flow rate (l/min - 3 bar): 8

Flow rate - Filtered functional water (l/min): 2

Installation type: Deck-mounted

Led signal water filter activation

Led signal water filter replacement alert

Number of filter stages: 5

Plug Type: EU

Pull-out spout

Swivel spout

© Copyright 2026, Roca Sanitario, S.A. - All rights reserved | 16-10-2026 | https://www.mt.roca.com/products/kitchen-mixer-two-outlets-filtered-water-tap-water-retractable-swivel-c-spout-cold-start-5stage-filter-included-5A8D3G..0?sku=A5A8D3GSM0

Water filter consumable included

© Copyright 2026, Roca Sanitario, S.A. - All rights reserved | 16-10-2026 | https://www.mt.roca.com/products/kitchen-mixer-two-outlets-filtered-water-tap-water-retractable-swivel-c-spout-cold-start-5stage-filter-included-5A8D3G..0?sku=A5A8D3GSM0

BOUGHT TOGETHER FREQUENTLY



5 stages filter for kitchen sink mixer with filtered water

5A803G..0

© Copyright 2026, Roca Sanitario, S.A. - All rights reserved | 16-10-2026 | https://www.mt.roca.com/products/kitchen-mixer-two-outlets-filtered-water-tap-water-retractable-swivel-c-spout-cold-start-5stage-filter-included-5A8D3G..0?sku=A5A8D3GSM0





Aquafy

Roca's Kitchen Filtration System offers a safe, convenient and waste-reducing alternative to bottled water solution for better tasting drinking water. With easy installation under the sink, the collection includes a variety of faucets with three designs and three finishes, each equipped with a five-stage filter. An LED light provides a timely alert when the filter requires replacement.

INSTALLATION AND USER MANUALS

Installation Handbook

© Copyright 2026, Roca Sanitario, S.A. - All rights reserved | 16-10-2026 | https://www.mt.roca.com/products/kitchen-mixer-two-outlets-filtered-water-tap-water-retractable-swivel-c-spout-cold-start-5stage-filter-included-5A8D3G..0?sku=A5A8D3GSM0